frost DRAINAGE

Product Specification



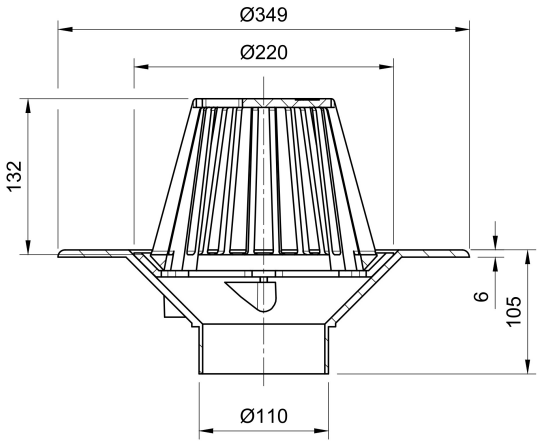

Name
Frost Cold Roof drain assembly - fixed dome 220mm circular, medium sump body with clamp, vertical spigot outlet 110mm

Code
33.0031

Description
Frost Cold Roof drain assembly - fixed dome 220mm circular, medium sump body with clamp, vertical spigot outlet 110mm.
Domed rainwater outlets are suited to cold roof construction where the waterproof membrane is located on top of the roof deck.

Cast Iron Grade EN-GJL-150 to BS EN 1561:1997
80%-97% recycled materials
100% recyclable

Polycarbonate dome

Body Material
CAST IRON

Body Type
N/A

Grating Material
POLYCARBONATE

Flow Rate
10.70

Outlet Type
SPIGOT

Grating Type
DOMED

Load Rating
N/A