Product Specification



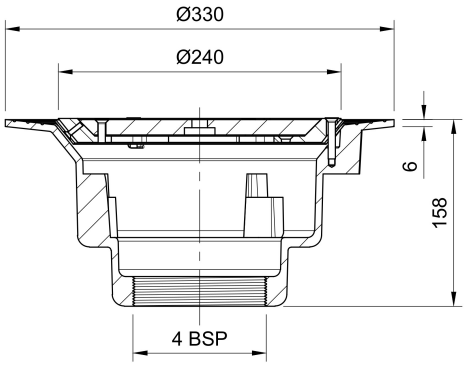

Name
Frost Cold Roof drain assembly - cast iron grating, fixed 240mm circular, large sump body with clamp, vertical threaded outlet 4" BSP

Code
33.0054

Description
Frost Cold Roof drain assembly with fixed 240mm circular flat grating, large sump body and vertical threaded outlet 4" BSP
Supplied with body and clamp.
Suited to cold roof construction where the waterproof membrane is located on top of the roof deck.

Cast Iron Grade EN-GJL-150 to BS EN 1561:1997
80%-97% recycled materials
100% recyclable

Ductile Iron BS EN 1563 & 1564.
Greater than 80% recycled material
100% recyclable
Cast with the ductility of steel and more than doubling the tensile strength of cast iron.

Body Material
CAST IRON

Body Type
N/A

Grating Material
DUCTILE IRON

Flow Rate
10.70 l/s

Outlet Type
THREADED

Grating Type
FLAT

Load Rating
N/A

Threaded Joint Instructions

Apply Low Modulus Silicone to the thread of the pipe spigot & female thread within the roof outlet body. Using a flat spreading utensil, evenly spread the silicone into the threaded grooves. Insert the male into the female thread of the roof outlet body then carefully turn clockwise ensuring the thread is not "cross threading". Once fully tightened clean off excess silicone to both ends of the threaded connection.