frost DRAINAGE

Product Specification



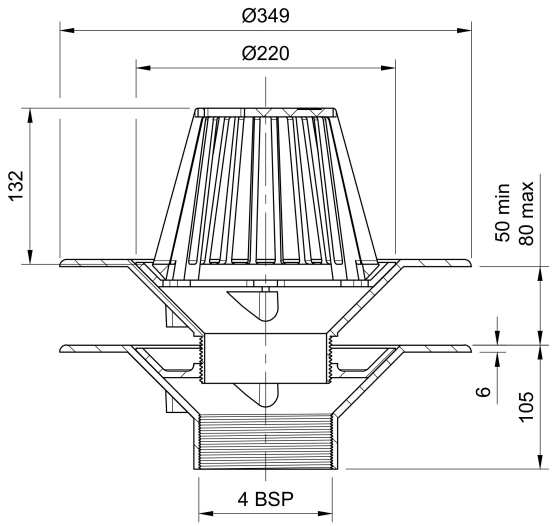

Name
Frost Warm Roof drain assembly - fixed dome 220mm circular, large sump body with clamp, vertical spigot outlet 110mm

Code
33.0121

Description
Frost Warm Roof drain assembly - fixed dome 220mm circular, large sump body with clamp, vertical spigot outlet 110mm.
Rainwater outlets with domed gratings are suited to warm roof construction where the waterproof membrane is located above the insulation layer on top of the roof deck.

Cast Iron Grade EN-GJL-150 to BS EN 1561:1997
90%-97% recycled materials
100% recyclable

Polycarbonate dome

Body Material
CAST IRON

Body Type
N/A

Grating Material
POLYCARBONATE

Flow Rate
10.70

Outlet Type
THREADED

Grating Type
DOMED

Load Rating
N/A