frost DRAINAGE

Product Specification



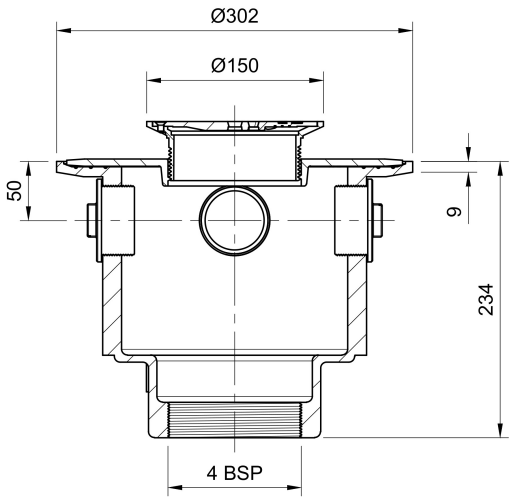

Name
Frost Floor drain 150mm circular nickel bronze grating with large deep sump body and threaded outlet size 4" BSP

Code
31.0851

Description
Frost floor drain assembly with height adjustable 150mm circular nickel bronze grating, large deep sump body and threaded outlet.
Membrane clamp & collar are an optional extra, 31.2030. Can be trapped using a removable trap (31.9510).
Quick and easy to install
Maintenance free and durable
Can be connected to all types of pipework in general use, using adaptors.
Nickel bronze for use in areas where they contribute to the aesthetic appeal of an area.

Nickel Bronze BS1400
Greater than 80% recycled material
100% recyclable

Cast iron Grade EN-GJL-150 to BS EN 1561:1997
80-97% recycled materials
100% recyclable

Body Material
CAST IRON

Body Type
UNTRAPPED

Grating Material
NICKEL BRONZE

Flow Rate
N/A

Outlet Type
THREADED

Load Rating
L15 To BS EN 1253-1:2015

Threaded Joint Instructions

Apply Low Modulus Silicone to the thread of the pipe spigot & female thread within the roof outlet body. Using a flat spreading utensil, evenly spread the silicone into the threaded grooves. Insert the male into the female thread of the roof outlet body then carefully turn clockwise ensuring the thread is not "cross threading". Once fully tightened clean off excess silicone to both ends of the threaded connection.