Product Specification



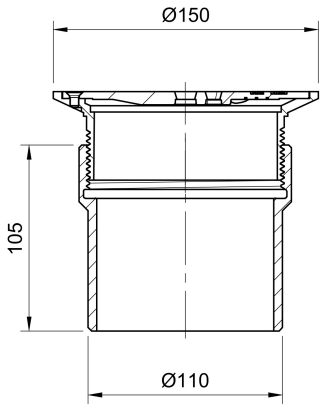

Name
Frost floor drain 150mm circular nickel bronze grating with direct connection spigot outlet, 100mm

Code
31.0051

Description
Frost floor drain 150mm circular nickel bronze grating with direct connection spigot outlet, 100mm.
Can be trapped using a removable trap (31.9510).
Quick and easy to install
Maintenance free and durable
Can be connected to all types of pipework in general use, using adaptors.
Nickel bronze for use in areas where they contribute to the aesthetic appeal of an area.

Nickel Bronze BS1400
Greater than 80% recycled material
100% recyclable

Cast iron Grade EN-GJL-150 to BS EN 1561:1997
80-97% recycled materials
100% recyclable

Body Material
CAST IRON

Body Type
UNTRAPPED

Grating Material
NICKEL BRONZE

Flow Rate
N/A

Outlet Type
SPIGOT

Grating Type
Circular

Load Rating
L15 To BS EN 1253-1:2015