Product Specification

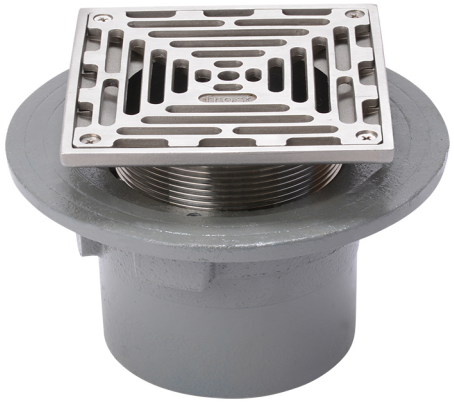

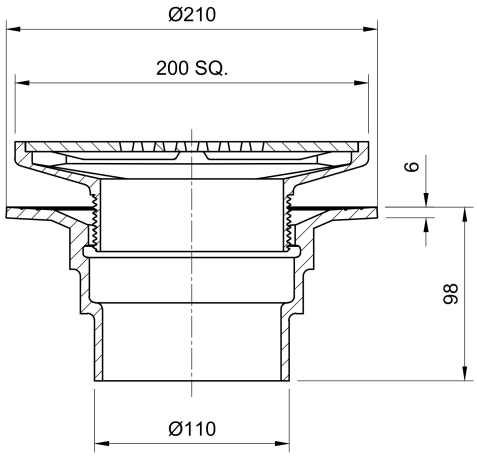

Name
Frost Floor drain 200mm square stainless steel grating with small sump body and spigot outlet size 100mm

Code
31.0335

Description
Frost Floor drain 200mm square stainless steel grating with small sump body and spigot outlet size 100mm.
Membrane clamp & collar are an optional extra (31.2030). Can be trapped using a removable trap (31.9510).
Quick and easy to install
Maintenance free and durable
Connect body to all types of pipework in general use, using adaptors.
Stainless steel for use in areas where they contribute to the aesthetic appeal of an area.

Stainless Steel BS EN 10088-1:2005
Grade 1.4301 (304) or (316) if specified
Average recyclable content 75%-85%

Cast iron Grade EN-GJL-150 to BS EN 1561:1997
80-97% recycled materials
100% recyclable

Body Material
CAST IRON

Body Type
UNTRAPPED

Grating Material
STAINLESS STEEL

Flow Rate
N/A

Outlet Type
SPIGOT

Grating Type
Square

Load Rating
L15 To BS EN 1253-1:2015