vision

PRODUCT SPECIFICATION SHEET

01 UNDERGROUND DRAINAGE



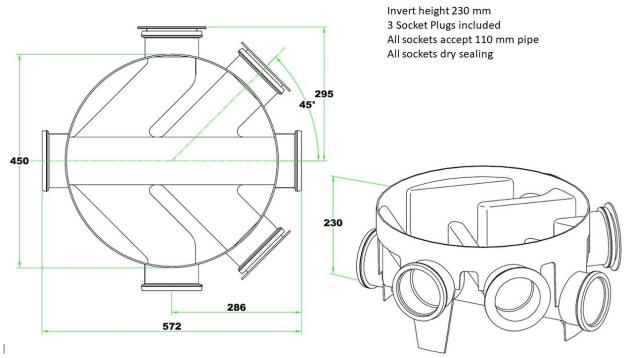

Name
450mm Inspection Chamber Base 110mm Inlet for installation up to 1.2m - New

Code
450VC4N

Description
Vision Drainage Inspection Chamber for surface water and sewage drainage systems.
450mm dia x 225mm Invert Level.
110mm main run - 5 inlets.
Includes 3x 110mm socket plugs.
Max. 1.2m deep.

Manufactured under BS EN ISO 9001:2008 & 2015 certification and tested to the requirements of BS EN 13598-1:2010, BS EN 1401-1:2009 and BS EN 13476 -2:2018.

Size
110mm

450mm

Diameter