vision

PRODUCT SPECIFICATION SHEET

01 UNDERGROUND DRAINAGE



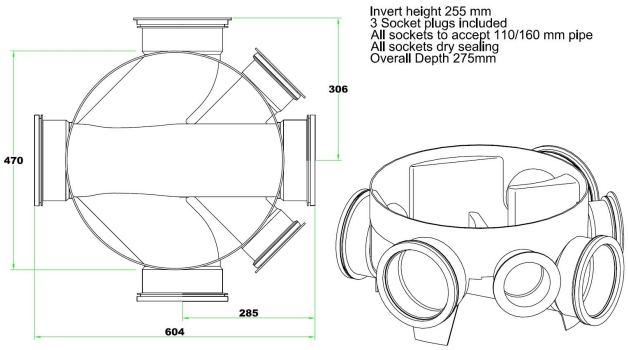

Name

450mm Inspection Chamber Base 160mm Channel 2 x 160mm Inlets & 2 x 110mm Inlets, for installation up to 1.2m - New

Code

450VC6N

Description

Vision Drainage Inspection Chamber for surface water and sewage drainage systems.
160mm channel, 160/110mm pipe inlets.
Complete with 2 x 160mm and 1 x 110mm socket plugs.
225mm Invert.
Max. 1.2m install depth.

Manufactured under BS EN ISO 9001:2008 & 2015 certification and tested to the requirements of BS EN 13598-1:2010, BS EN 1401-1:2009 and BS EN 13476 -2:2018.

450mm